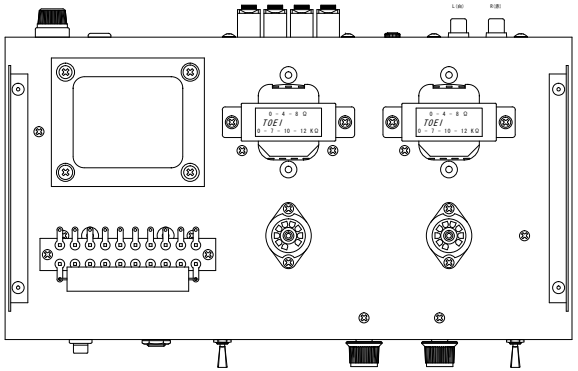
L(白)
R(赤)
0 - 4 - 8 Ω
TOEI
0 - 7 - 10 - 12 KΩ
0 - 4 - 8 Ω
TOEI
0 - 7 - 10 - 12 KΩ

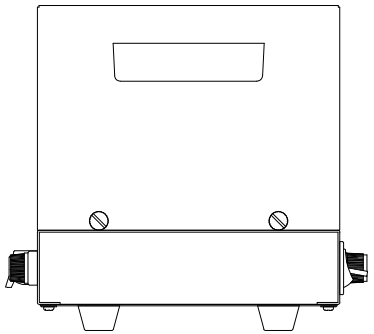

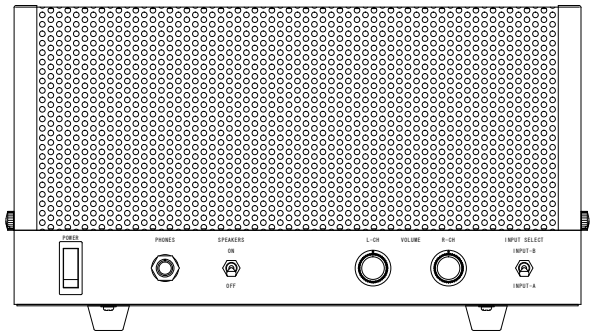
POWER
PHONES
SPEAKERS
ON
OFF
L-CH
VOLUME
R-CH
INPUT SELECT
INPUT-B
INPUT-A

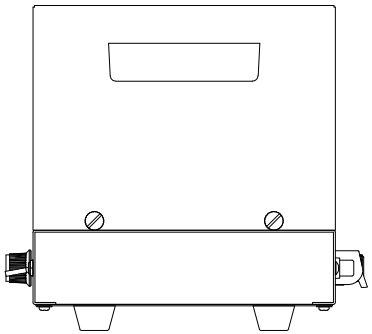

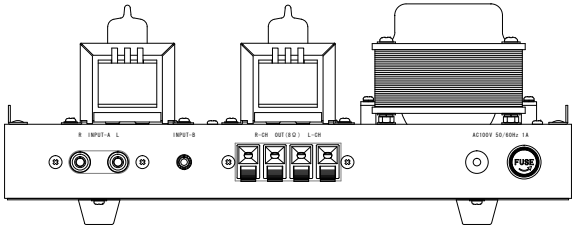
R INPUT-A L
INPUT-B
R-CH OUT(8Ω) L-CH
AC100V 50/60Hz 1A
FUSE

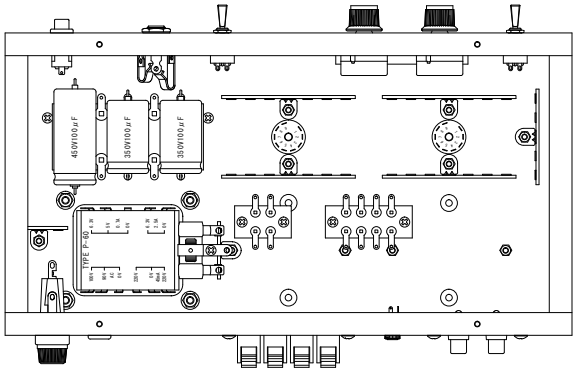
450V100μF
350V100μF
350V100μF
TYPE F-10