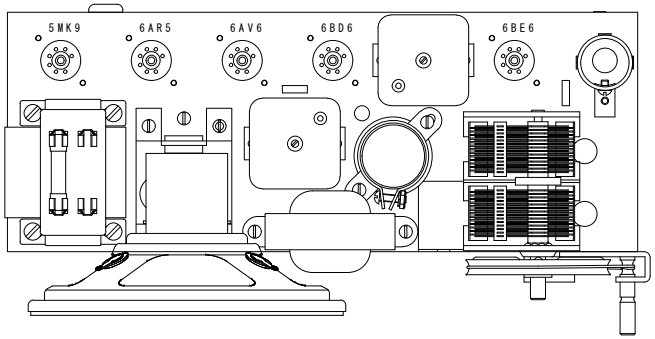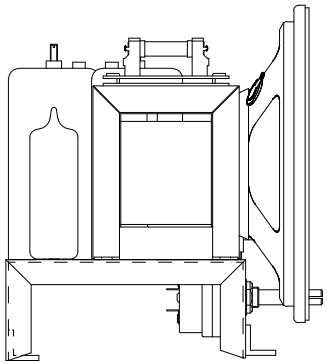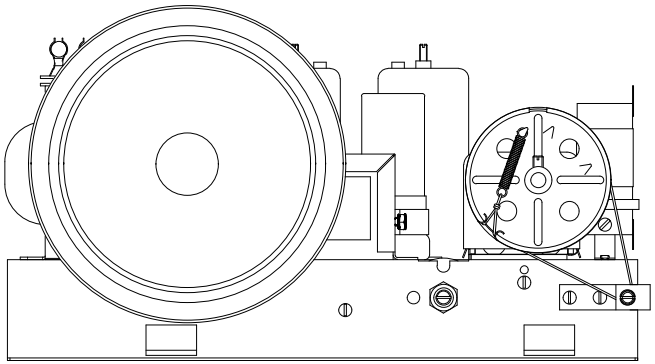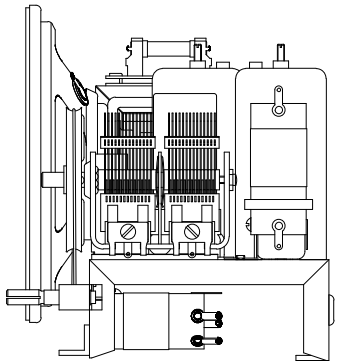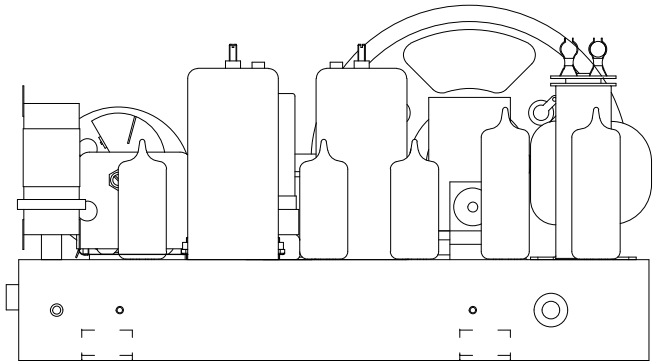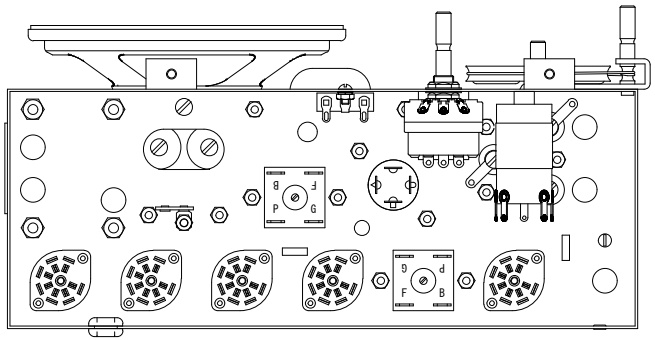
5MK9
6AR5
6AV6
6BD6
6BE6